Electrolux PROFESSIONAL

Modular Cooking Range Line thermaline 80 - Half Module Freestanding Electric Fry Top, 1 Side, H=700

ITEM #

MODEL #

NAME #

SIS #

AIA #



588362 (MAHAEADDAO)	Electric Fry Top with smooth chrome Plate, one-side operated
588366 (MAHCEADDAO)	Electric Fry Top with ribbed chrome Plate, one-side operated

Short Form Specification

Item No.

Unit constructed according to DIN 18860_2 with 20 mm drop nose top and 70 mm recessed plinth. Internal frame for heavy duty sturdiness in stainless steel. 2 mm top in 1.4301 (AISI 304). Flat surface construction, easily cleanable. THERMODUL connection system enables seamless worktop when units are connected and avoids soil penetrating. Chromium-plated mild steel cooking surface with non-stick finishing for optimal grilling. Powerblock heating system for optimal temperature distribution. Large drain hole allows draining of cooking juices into a large collector. Overheat protection switches off the supply in case of overheating. Standby function saves energy and quickly recovers maximum power. Metal knobs with embedded hygienic silicon "soft" grip enable easier handling and cleaning.
IPX5 water resistant certification.
Configuration: Freestanding, one-side operated.

Main Features

- Large drain hole on cooking surface permits the draining of residual cooking juices into a large collector placed under the cooking surface.
- Overheat protection: a temperature sensor switches off the supply in case of overheating.
- Stainless steel high splash guards on the rear and sides of cooking surface.
- Units have separate controls for each half module of the cooking surface.
- All major components may be easily accessed from the front.
- THERMODUL connection system creates a seamless work top when units are connected to each other thus avoiding soil penetrating vital components and facilitating the removal of units in case of replacement or service.
- Metal-covered knobs with embedded hygienic "soft-touch" grip for easier handling and cleaning. The special design of the controls prevents infiltration of liquids or soil into vital components.
- Powerblock heating system for optimal temperature distribution.
- Large visible digital display manufactured in tempered glass to resist heat and chemicals, showing temperatures or power settings. The display also shows on/off status of the appliance and on/off status of the heating elements.

Construction

- 2 mm top in 1.4301 (AISI 304).
- Unit constructed according to DIN 18860_2 with 20 mm drop nose top and 70 mm recessed plinth.
- Flat surface construction with minimal hidden areas to easily clean all surfaces
- IPX5 water resistance certification.
- Cooking surface in chromium-plated mild steel with non-stick finishing for optimum grilling results.
- Cooking surface to be completely smooth or completely ribbed.
- Internal frame for heavy duty sturdiness in stainless steel.

Sustainability

- Standby function for energy saving and fast recovery of maximum power.

APPROVAL:

Optional Accessories

- Connecting rail kit, 800mm PNC 912500 ❑
- Stainless steel side panel, 800x700mm, freestanding PNC 912509 ❑
- Portioning shelf, 400mm width PNC 912522 ❑
- Portioning shelf, 400mm width PNC 912552 ❑
- Folding shelf, 300x800mm PNC 912577 ❑
- Folding shelf, 400x800mm PNC 912578 ❑
- Fixed side shelf, 200x800mm PNC 912583 ❑
- Fixed side shelf, 300x800mm PNC 912584 ❑
- Fixed side shelf, 400x800mm PNC 912585 ❑
- Stainless steel front kicking strip, 400mm width PNC 912630 ❑
- Stainless steel side kicking strip left and right, freestanding, 800mm width PNC 912655 ❑
- Stainless steel side kicking strip left and right, back-to-back, 1610mm width PNC 912661 ❑
- Stainless steel plinth, freestanding, 400mm width PNC 912859 ❑
- Connecting rail kit: modular 80 (on the left) to ProThermetic tilting (on the right), ProThermetic stationary (on the left) to ProThermetic (on the right) PNC 912971 ❑
- Connecting rail kit: modular 80 (on the right) to ProThermetic tilting (on the left), ProThermetic stationary (on the right) to ProThermetic (on the left) PNC 912972 ❑
- Endrail kit, flush-fitting, left PNC 913109 ❑
- Endrail kit, flush-fitting, right PNC 913110 ❑
- Endrail kit (12.5mm) for thermaline 80 units, left PNC 913200 ❑
- Endrail kit (12.5mm) for thermaline 80 units, right PNC 913201 ❑
- Stainless steel side panel, left, H=700 PNC 913214 ❑
- Stainless steel side panel, right, H=700 PNC 913215 ❑
- T-connection rail for back-to-back installations without backsplash (to be ordered as S-code) PNC 913227 ❑
- Insert profile D=800mm PNC 913230 ❑
- Perforated shelf for warming cabinets and cupboard bases (one-side operated TL80-85-90 and two-side operated for TL80) PNC 913233 ❑
- Energy optimizer kit 14A - factory fitted PNC 913244 ❑
- Endrail kit, (12.5mm), for back-to-back installation, left PNC 913249 ❑
- Endrail kit, (12.5mm), for back-to-back installation, right PNC 913250 ❑
- Endrail kit, flush-fitting, for back-to-back installation, left PNC 913253 ❑
- Endrail kit, flush-fitting, for back-to-back installation, right PNC 913254 ❑
- Side reinforced panel only in combination with side shelf, for freestanding units PNC 913258 ❑
- Side reinforced panel only in combination with side shelf, for back-to-back installations, left PNC 913271 ❑
- Side reinforced panel only in combination with side shelf, for back-to-back installation, right PNC 913272 ❑
- Shelf fixation for TL80-85-90 one-side operated, TL80 two-side operated PNC 913279 ❑
- Filter W=400mm PNC 913663 ❑
- Stainless steel dividing panel, 800x700mm, (it should only be used between Electrolux Professional thermaline Modular 80 and thermaline C80) PNC 913668 ❑
- Stainless steel side panel, 800x700mm, flush-fitting (it should only be used against the wall, against a niche and in between Electrolux Professional thermaline and ProThermetic appliances and external appliances - provided that these have at least the same dimensions) PNC 913684 ❑

ACC_CHEM

- C41 HI-TEMP RAPID DEGREASER, 1 pack of six 1 lt. bottles (trigger incl.) PNC 0S2292 ❑

Electrolux PROFESSIONAL

Modular Cooking Range Line thermaline 80 - Half Module Freestanding Electric Fry Top, 1 Side, H=700

Electric

Supply voltage:	400 V/3N ph/50/60 Hz
Total Watts:	5.1 kW

Key Information:

Cooking Surface Depth:	615 mm
Cooking Surface Width:	300 mm
Working Temperature MIN:	80 °C
Working Temperature MAX:	280 °C
External dimensions, Width:	400 mm
External dimensions, Depth:	800 mm
External dimensions, Height:	700 mm
Storage Cavity Dimensions (width):	340 mm
Storage Cavity Dimensions (height):	330 mm
Storage Cavity Dimensions (depth):	740 mm
Net weight:	91 kg
Configuration:	One-Side Operated
Cooking surface type:	
588362 (MAHAEADDAO)	Smooth
588366 (MAHCEADDAO)	Ribbed
Cooking surface - material:	Chromium Plated mild steel mirror

Sustainability

Current consumption:	7.4 Amps

Modular Cooking Range Line
thermaline 80 - Half Module Freestanding Electric Fry Top, 1 Side, H=700

Front

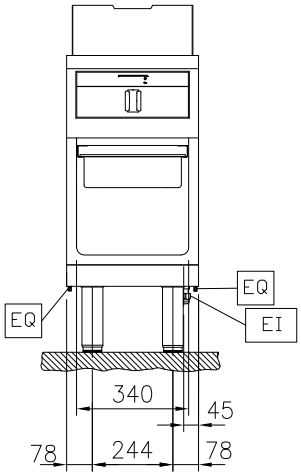

Side

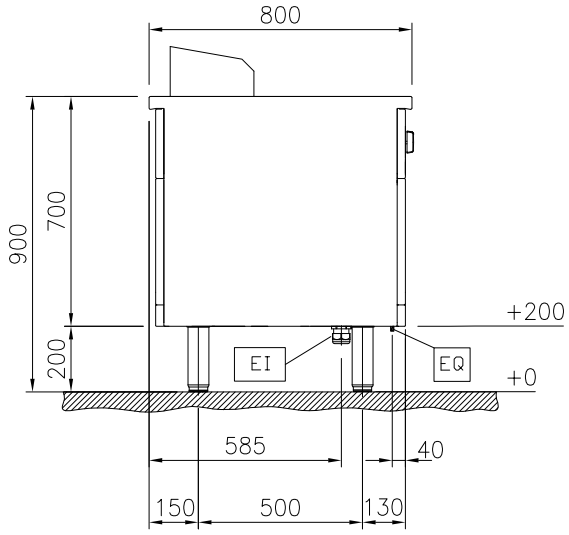

EI = Electrical inlet (power)
EQ = Equipotential screw

Top

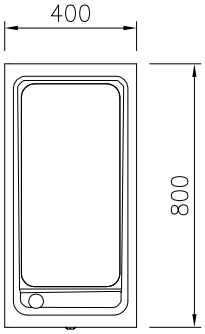

Front

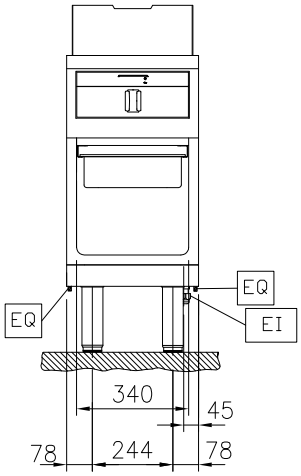

Side

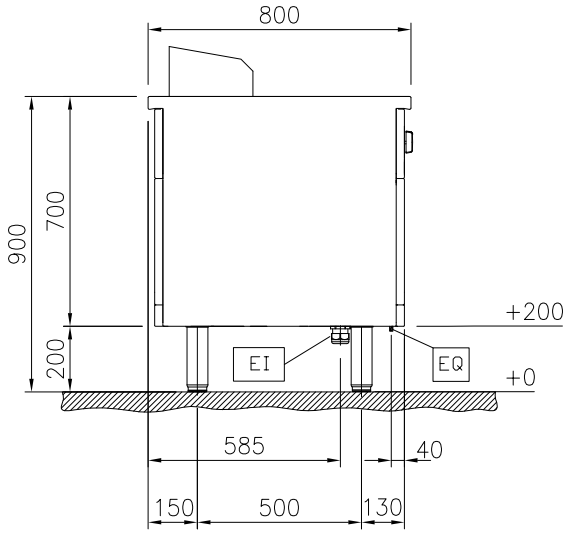

EI = Electrical inlet (power)
EQ = Equipotential screw

Top

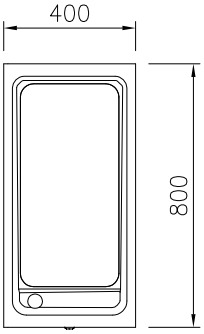

Modular Cooking Range Line
thermaline 80 - Half Module Freestanding Electric Fry Top, 1 Side, H=700

The company reserves the right to make modifications to the products without prior notice. All information correct at time of printing.

2026.11.19